CRYSTORAMA LIGHTING

Crystorama.com

ASSEMBLY INSTRUCTION MODEL #FUL-902-BK

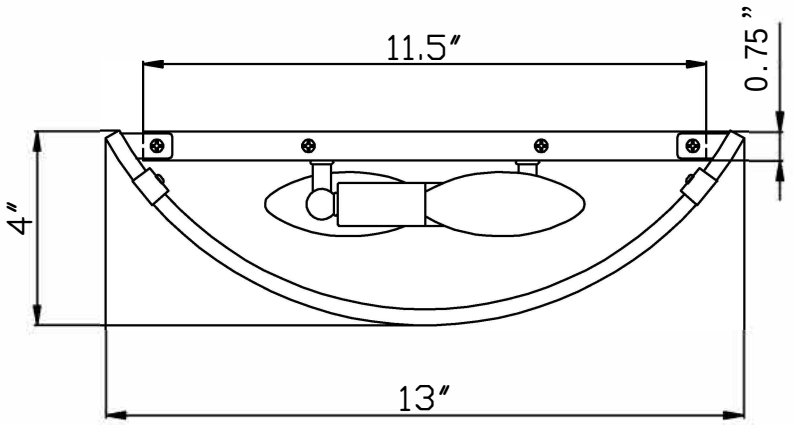

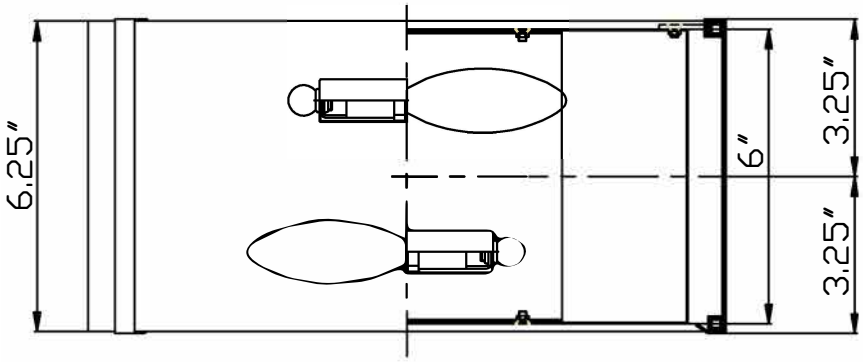

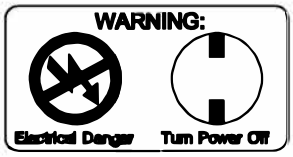

All electrical components must be installed by a licensed electrician in accordance with the National Electric Code and the appropriate local electrical codes.



Intertek

You will need 2 – Cand.Bulb

40 Watts Recommended

60 Watts Max

USE LED BULBS FOR EXTENDED USE

This fixture is dry rated

How to Install

1. Attach the backplate onto the outlet box using the 4 screws.
2. Install the bulb into the socket.
3. Attach the Fabric shade onto the backplate

WARNING: This product can expose you to Lead, which is known to the State of California to cause cancer and/or birth defects or reproductive harm. For more information go to www.P65Warnings.ca.gov

CRYSTORAMA LIGHTING

Crystorama.com

PART NUMBER MODEL #FUL-902-BK

Part Number

Part Numbers
A. (1)—Mounting hardware
B. (1)—Backplate; W11.5"XH6"XD0.75"; #XAR902BKBKP11.5IN
C. (2)—Screws; 8/32"
D. (2)—Screws; M3
E. (2)—Socket
F. (1)Fabric Shade; W13"XH6.25"XD4" #XAR902SHA13IN

